Standard Smith Manual
For Odin Rack

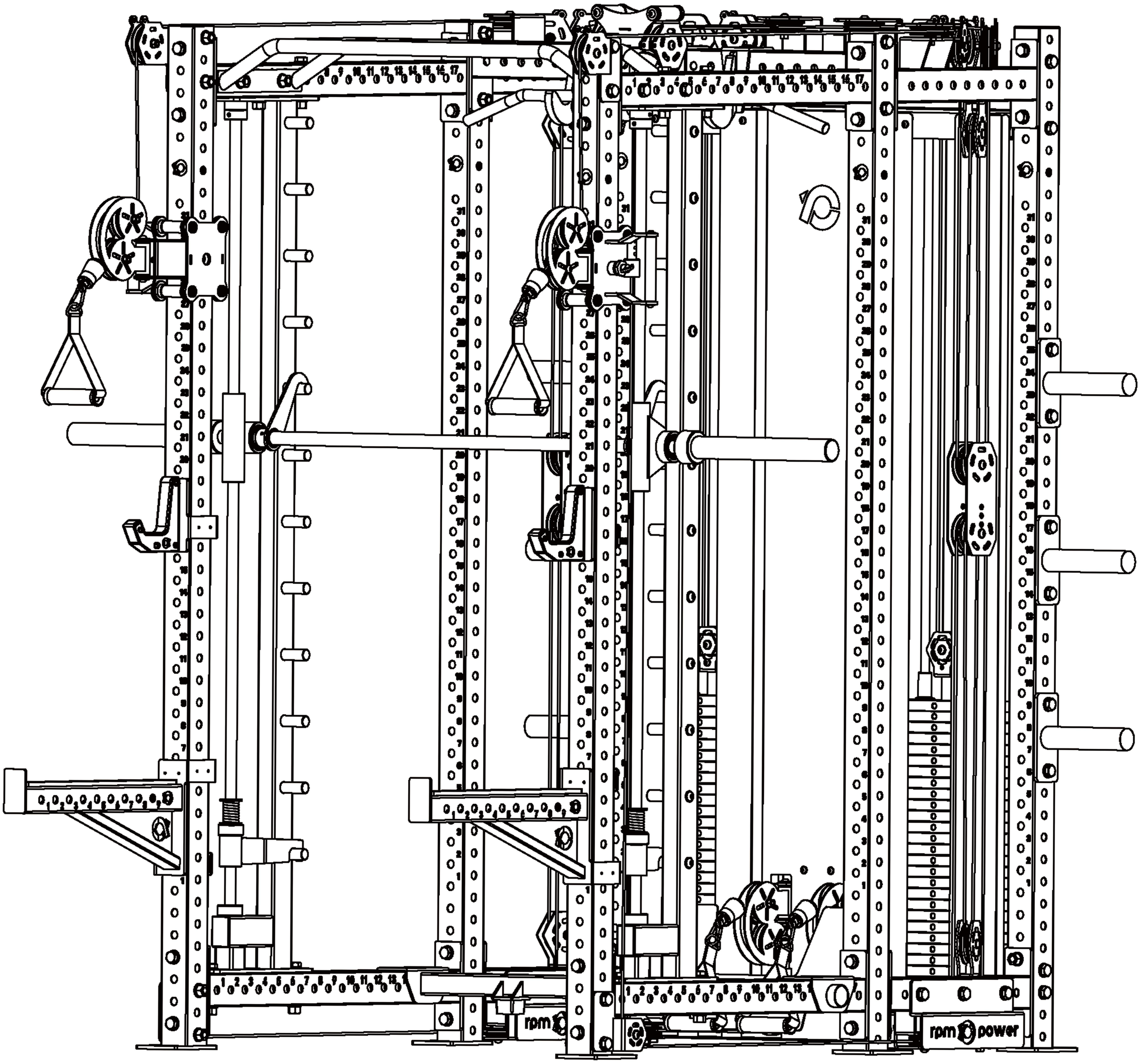

Parts Details-1

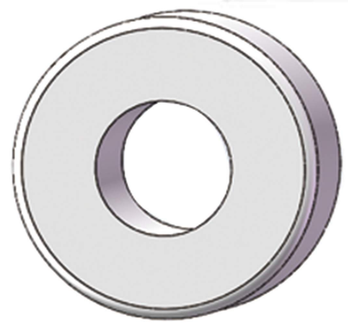				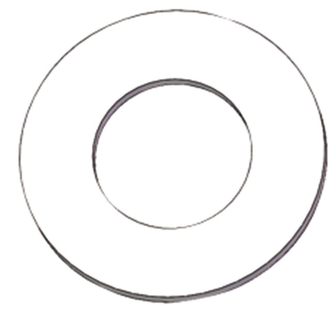	
NO.1	25 Round Shock Absorption Pads*4PCS	NO.2	25 spring *2PCS	NO.3	25. Increase the flat pad *4PCS
		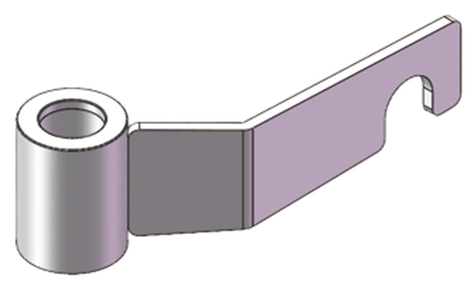		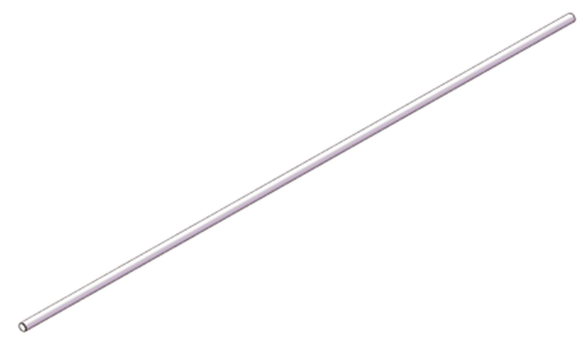	
NO.4	Olympic pole *1PC	NO.5	Hook group*a pair	NO.6	Smith Guide Rail*2PCS
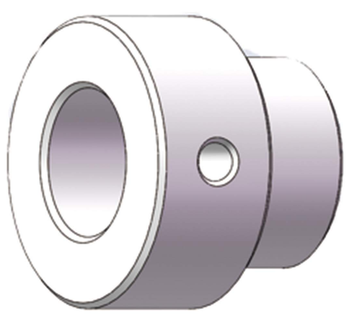		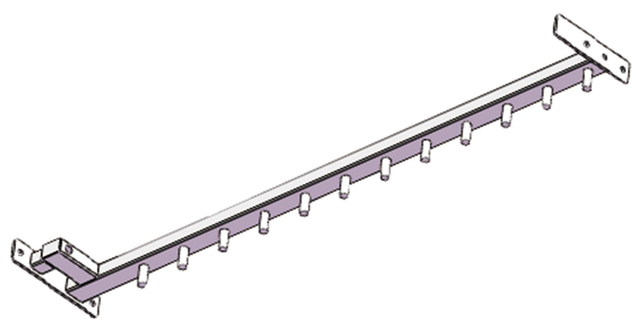			
NO.7	Smith Guide Rail Bushing *2PCS	NO.8	Smith Upright *a pair		

Parts Details-2

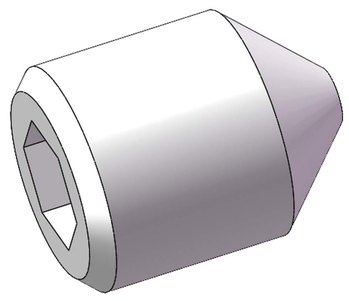		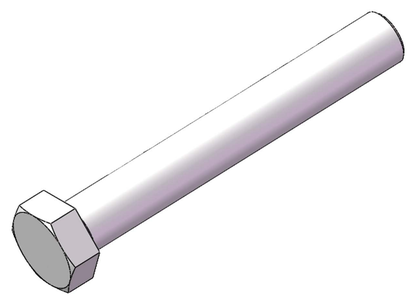		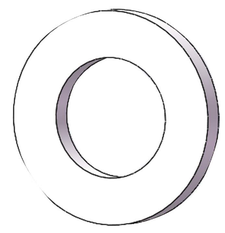	
A	Hexagon Socket Set Screw (M8X6)*4PCS	B	Hexagon socket screw (M16X110)*8PCS	C	WASHER(M16)*16PCS
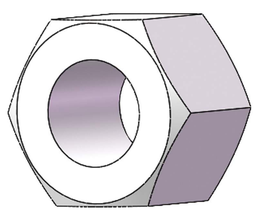					
D	LOCKNUT(M16)*8PCS				

STEPS

step	NO	NAME	NUM	NO	NAME	NUM
1	8	Smith Upright	a pair	B	M16X110	4
				C	WASHER(M16)	16
				D	LOCKNUT(M16)	8

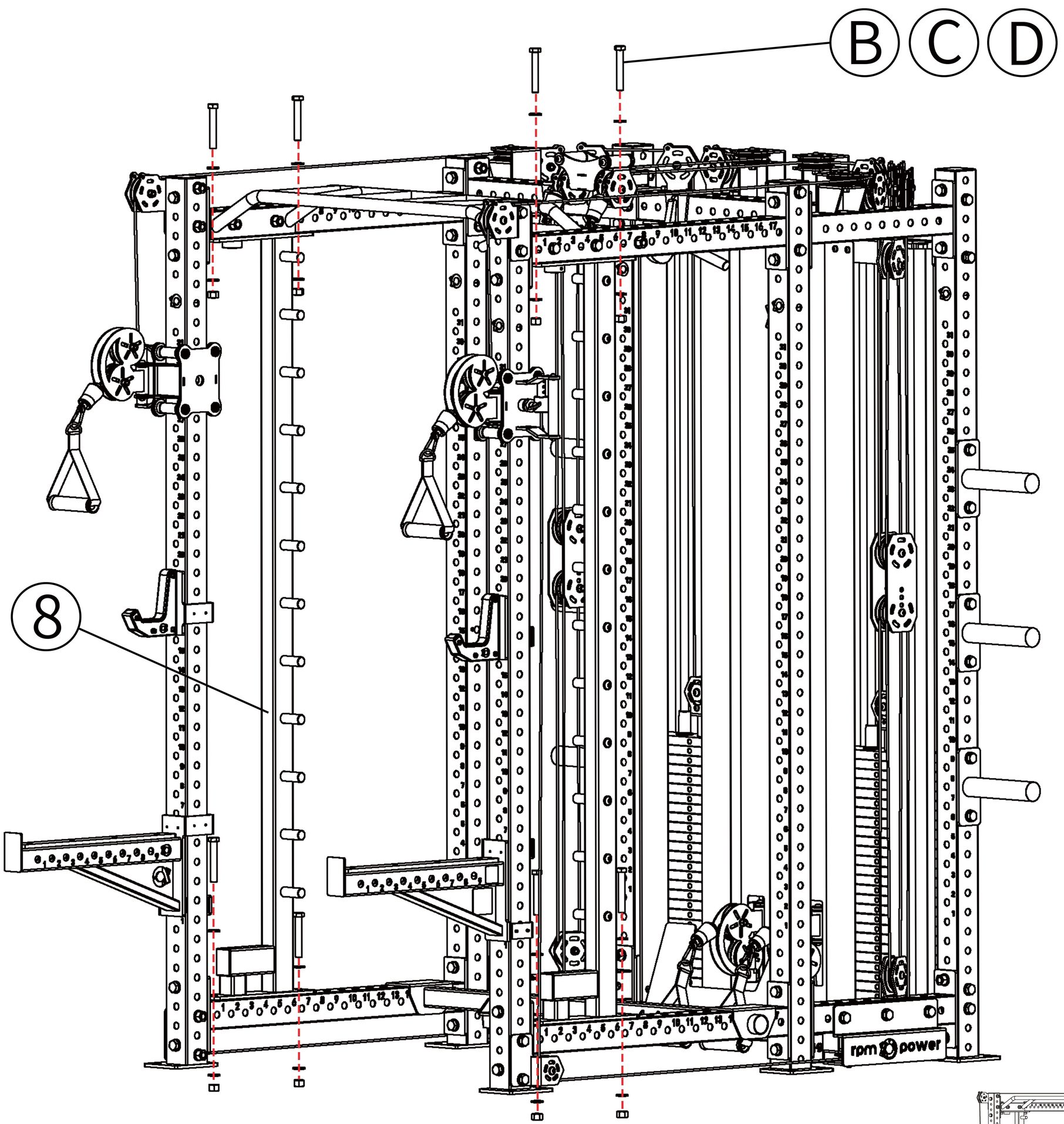

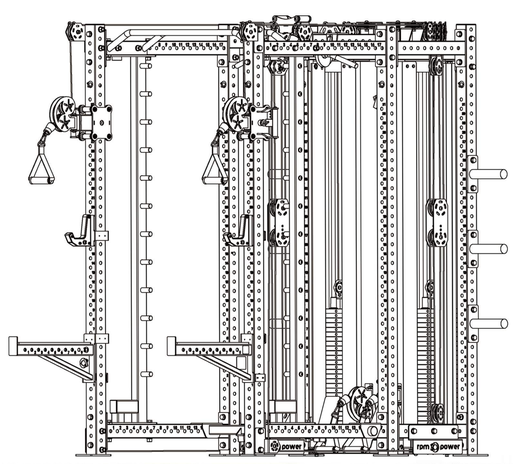
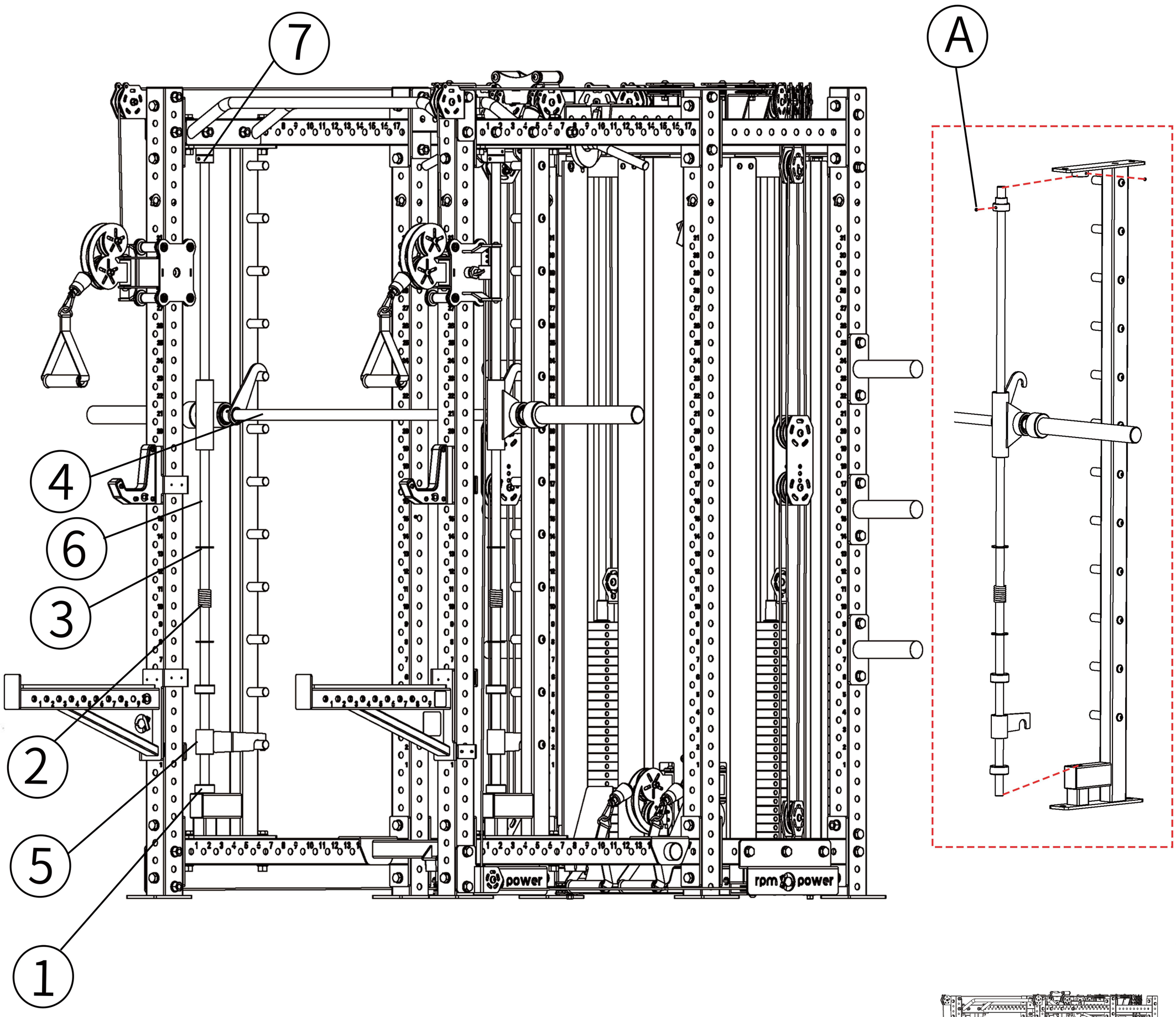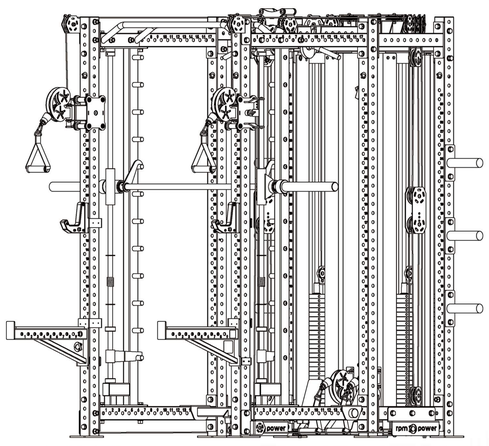
STEP						
STEP	NO	NAME	NUM	NO	NAME	NUM
2	1	25 Round Shock Absorption Pads	4	7	Smith Guide Rail Bushing	2
	2	25 spring	2	A	Hexagon Socket Set Screw (M8X6)	4
	3	25. Increase the flat pad	4			
	4	Olympic pole	1			
	5	Hook group	a pair			
	6	Smith Guide Rail	2